UNIVERSITY OF WOLLONGONG IN DUBAI

CSIT321 - Innovation Fair Autumun ‘25

SHIELD

SECURE HEALTH INTELLIGENCE & EVALUATION LOGIC DATABASE

from team Hexacore

The Problem

SHIELD

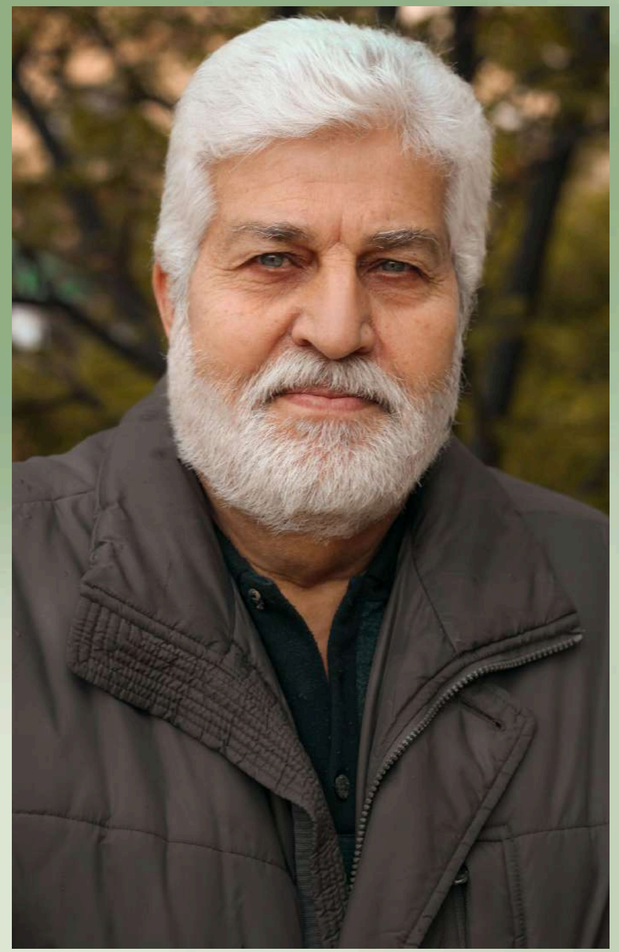

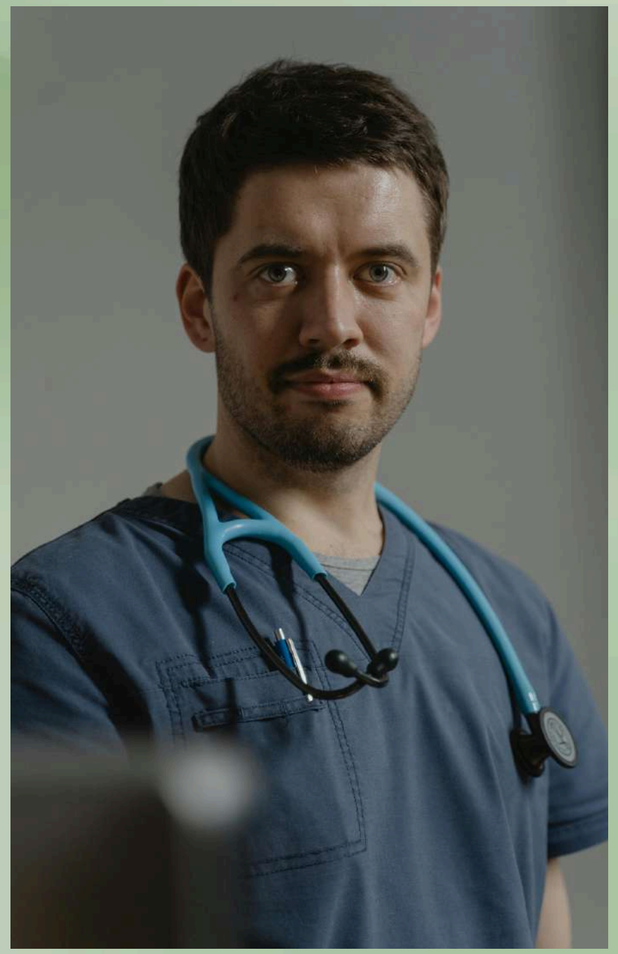

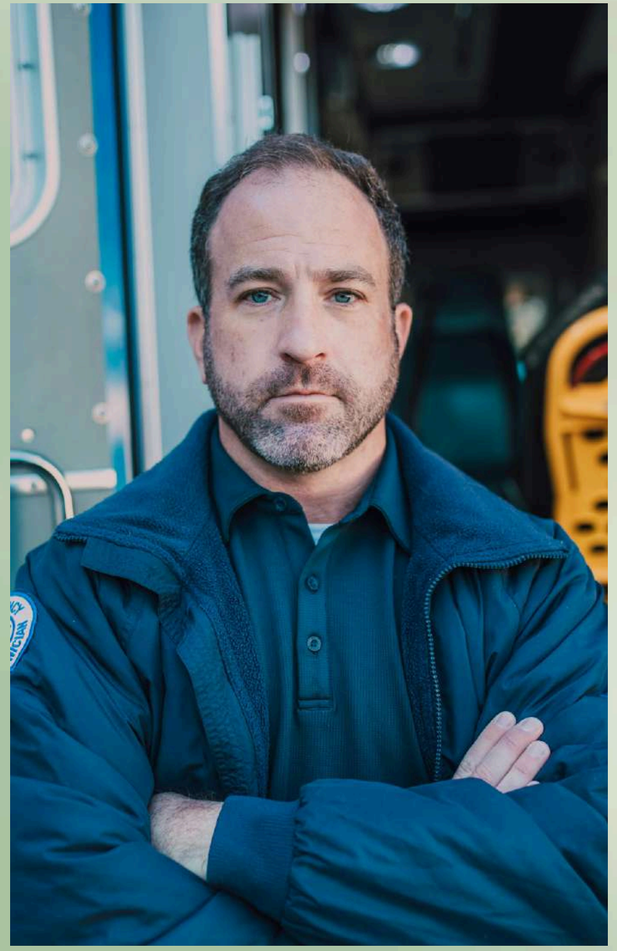

Why Existing Solutions Fail

SHIELD

Competitors	Okadoc	MOHAP	Native Health Apps	Hospital telemetry
Primary Function	Appointment booking & teleconsultation	Government health admin & records	Activity and vitals tracking	In-patient monitoring
What it's missing	No monitoring, no predictive capability	No AI analysis, no real-time data	No medical interpretation, no clinical loop	Inaccessible outside clinical settings

Each solve the problems they were designed to but they leave a critical system gap between real-time data and clinical action.

The Insight

SHIELD

The Reality

Wearable sensors are already widely adopted, with millions of users generating continuous clinical-grade health data every day. However, this data remains largely disconnected from clinical decision-making.

The Gap

Healthcare systems are still reactive, where signals are collected in real time but interpreted too late. The core missing link is a bridge between continuous patient monitoring and actionable clinical insight at the point of care.

Our Product - SHIELD

SHIELD

Secure Health Intelligence & Evaluation Logic Database

Continuous Cardiac Monitoring Ecosystem

The system enables uninterrupted cardiovascular tracking using wearable devices and manual inputs, creating a continuous patient profile accessible remotely by doctors for long-term observation beyond episodic care.

Explainable and Clinically Interpretable Intelligence

All outputs are supported by SHAP-based reasoning and a clinically grounded RAG system, ensuring risk signals are explainable in clear, human-readable form rather than black-box predictions.

Emergency-Ready Cardiac Response System

Real-time vital threshold alerts with SOS escalation, sharing live location and recent vitals with emergency services and contacts for faster response.

How it Works

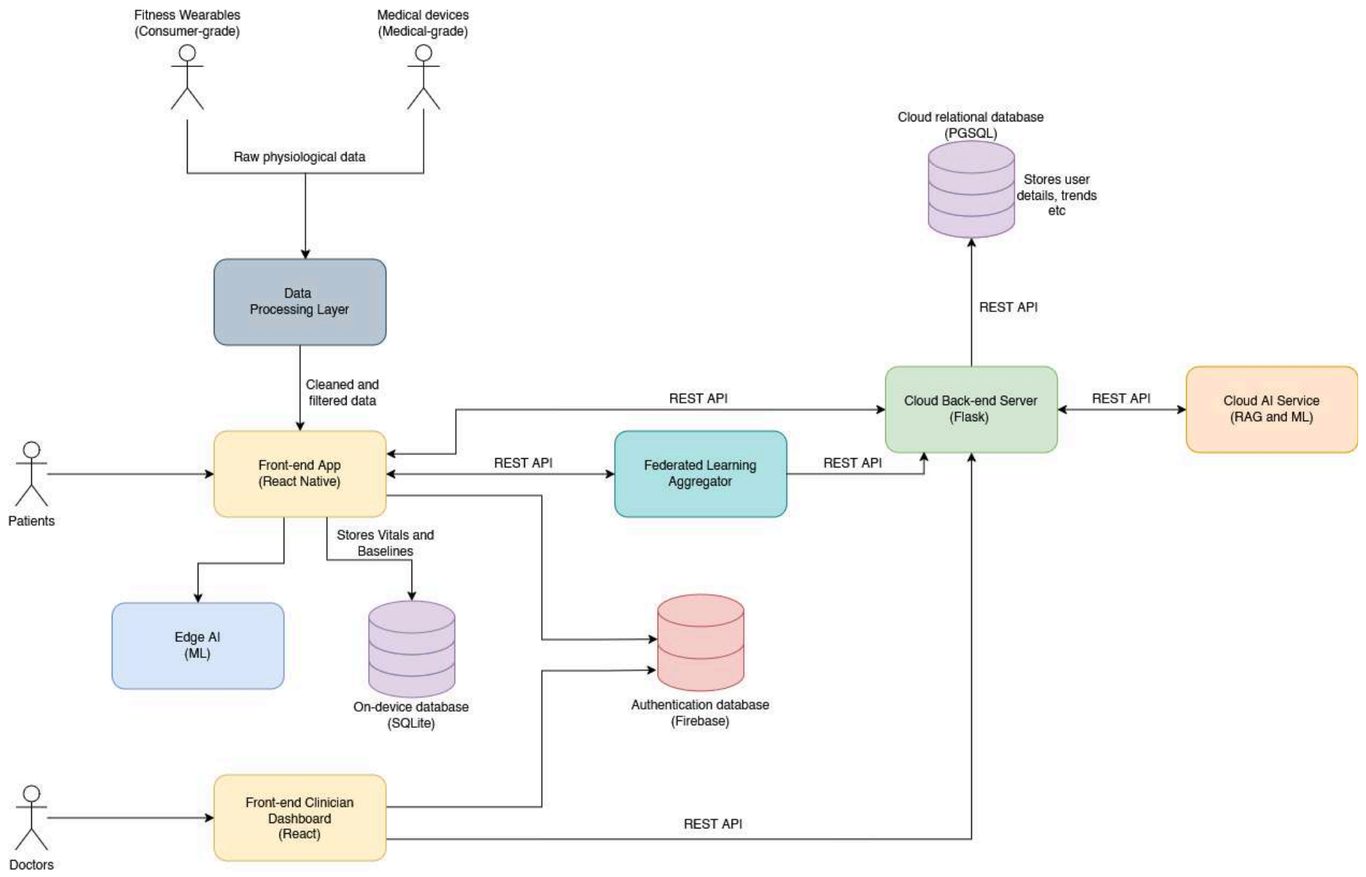
Fitness Wearables
(Consumer-grade)
Medical devices
(Medical-grade)
Raw physiological data
Data
Processing Layer
Cleaned and
filtered data
Cloud relational database
(PGSQL)
Stores user
details, trends
etc
REST API
REST API
Cloud Back-end Server
(Flask)
REST API
Cloud AI Service
(RAG and ML)
Patients
Front-end App
(React Native)
REST API
Federated Learning
Aggregator
REST API
Stores Vitals and
Baselines
Edge AI
(ML)
On-device database
(SQLite)
Authentication database
(Firebase)
Doctors
Front-end Clinician
Dashboard
(React)
REST API

How it Works

Fitness Wearable Pipeline (Samsung Health)

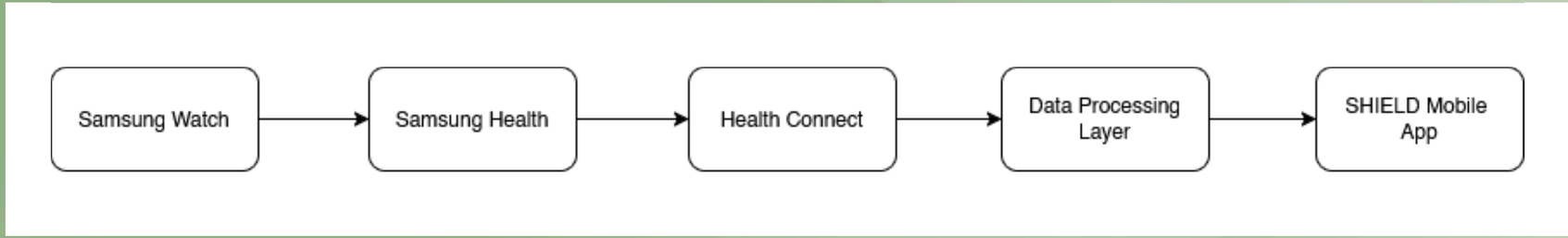

IoT Device Wearable Pipeline

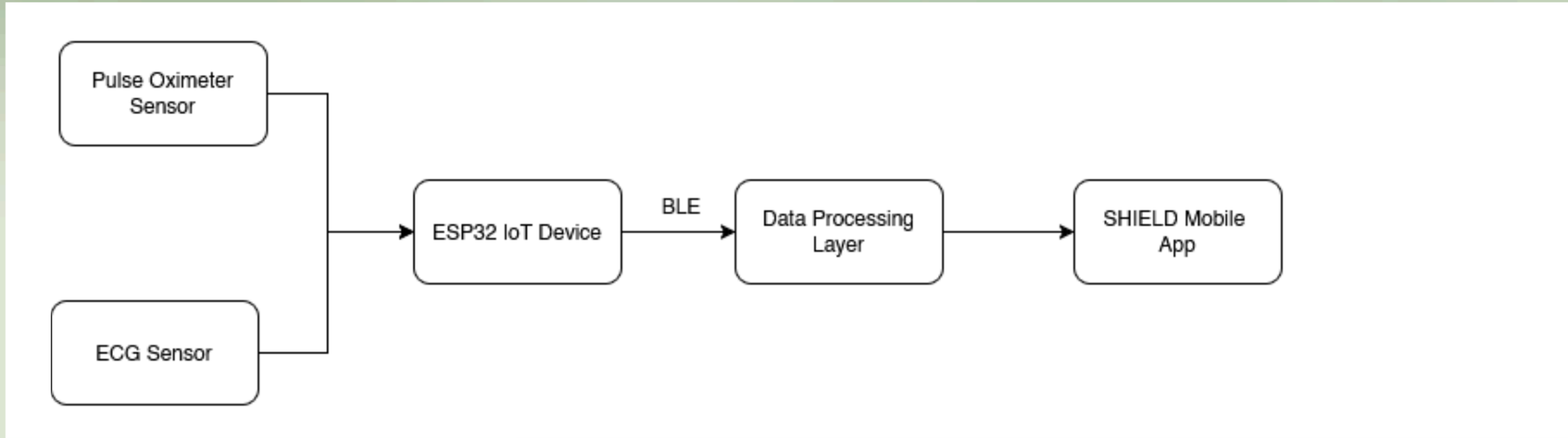

What SHIELD Does

SHIELD

Patient Side

- Continuous cardiac health monitoring via smartwatch, ESP32, or manual entry
- Long-term cardiovascular vital trend analysis for early pattern detection
- Pattern-based alert system detecting bradycardia, tachycardia, and possible arrhythmia
- Proactive cardiac risk scoring based on real-time physiological signals
- Explainable cardiac insights via clinically validated RAG-based assistant
- Emergency response system sharing live vitals and location with caregivers and services
- Smart health reminders for consistent cardiac vital logging
- Offline functionality ensuring uninterrupted monitoring in low-connectivity settings

What SHIELD Does

SHIELD

Doctor Side

- Real-time cardiac patient monitoring dashboard with vitals and alerts
- Longitudinal cardiovascular analytics across extended patient histories
- Explainable AI support (SHAP) providing clinical reasoning for risk predictions
- Risk-based cardiac patient prioritization for triage and intervention
- Real-time critical event alerting for cardiac emergencies
- Remote care management through notes, follow-ups, and ongoing engagement

Emergency Services Side

- Emergency API SOS system providing live location and last 1-hour vitals to emergency services for pre-arrival preparedness

LIVE DEMO

What’s Next

SHIELD

Phase 1

Clinical Validation

Transition from synthetic benchmarks to real-world pilot studies with UAE medical partners to calibrate the LSTM model against local demographics.

Phase 2

Medical-Grade Scaling

Replace current prototypes with certified clinical hardware like CGMs and smart cuffs to provide high-fidelity data suitable for medical prescriptions.

Phase 3

Regulatory Integration

Navigate the MOHAP Class B certification process and integrate with national health records like Malaffi using international HL7/FHIR data standards.

Analytics

SHIELD

Patient-Level Analytics

- Long-term vital trends (heart rate, BP, variability)
- Baseline comparison to detect abnormal changes
- Daily and weekly health summaries

Doctor-Level Analytics

- Patient risk overview dashboard
- Long-term cardiovascular history tracking
- Event history for past alerts and emergencies

System-Level Insights

- Conversion of raw vitals into structured health trends
- Time-based analysis of patient condition changes
- Unified view of real-time and historical data

Tech Stack

Frontend
- React Native - Mobile App
- React (TypeScript) - Doctor Portal
- TailwindCSS
- ShadCN components

Backend
- Python (Flask)
- Firebase Authentication
- PostgreSQL
- SQLite

AI / ML
- TensorFlow / TensorFlow Lite
- SHAP (Explainability)
- ChromaDB + Gemini
- Flower (Federated Learning)

Hardware
- ESP32 + MAX30102 (Heart Rate Sensor)
- AD8232 ECG Module
- BLE GATT Protocol

Infrastructure
- Neon Cloud (Database Hosting)
- Vercel (Server Hosting)
- GitHub Actions (CI/CD)
- TLS 1.3 (Secure Communication)
- SQLCipher (Encrypted Database)

Revenue Model

SHIELD

1. Hospital & Clinic Licensing

Subscription-based access to the SHIELD platform, including the monitoring dashboard, patient tracking system, and clinical decision support tools for continuous cardiac care.

2. System Integration Fees

One-time deployment charges for onboarding hospital infrastructure, including data pipeline setup, device connectivity, and integration with existing electronic health record systems.

3. Enterprise Deployment Contracts

Large-scale institutional agreements that position SHIELD as a clinical intelligence layer over existing wearable and hospital monitoring ecosystems.

THANK YOU